RoHS	This products can apply to the SESO Doc NO. QA-3-04-005 of Environmental&Material Management Rules

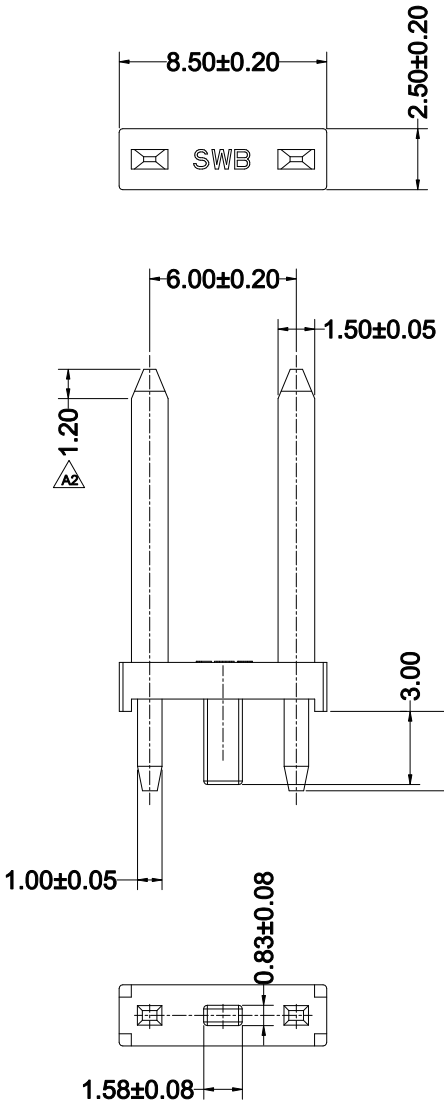

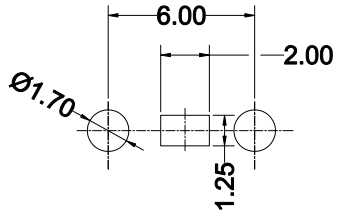

Recommended P.C.B Layout

General Tolerance±0.05

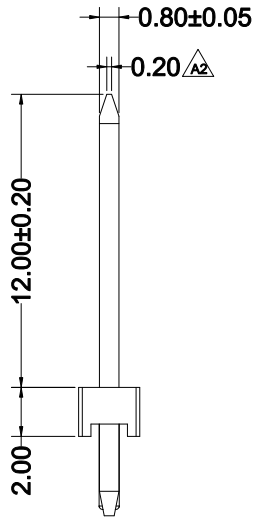

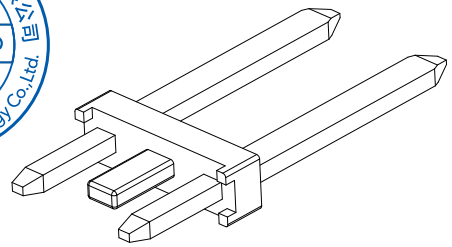

■Specifications :

- Voltage rating: 125V Max. AC / DC
- Current rating: 2A Max.AC / DC
- Withstanding voltage: 500V AC/minute
- Temperature range: -40°C~+105°C
- Max.processing temp: 260°C for 10seconds
- Material:
  Housing: PA9T UL94V-0
  Pin: Brass
- Plating: Matte Tin 100u" Min , Ni: 50u" Min.

6005 W V X - 02 P - 9T SW1 B B - 01

① ② ③ ④ ⑤ ⑥ ⑦ ⑧ ⑨ ⑩ ⑪

① Series No.
② Category：W-Wafer
③ Connector Type: V- 180°
④ Mouting Type: Blank-DIP
⑤ Row No.-Pin No.: 02-02P
⑥ Special No.: P-With Post
⑦ Material：9T-PA9T 94V-0
⑧ Plating Category:
SW1-Matte Tin100u" Min ; Ni 50u" Min.
⑨ Color: B-Black Color
⑩ Packing：B-Bag
⑪ 01-12.0/2.00/4.75

DATE	REV	ECN NO.	DESCRIPTION	MODIFY	APPROVAL
24-02-26	A3		Updated version	Aump chua	Jack Zhang
22-02-23	A2	EN120220223001	Modify the chamfer	Joshua	John
21-11-11	A1		Modity DIP dim for 3.25mm	Joshua	John

GENERAL TOLERANCE
.X ±0.30
.XX ±0.20
.XXX ±0.10
X.° ±2°
PROJECT

东莞市思索技术股份有限公司
Dongguan SESO Technology Co.,Ltd.

APPROVAL	CHECK	DRAWN	DATE
Jack Zhang	Larry Yang	Joshua	2021/07/28

PART NO.
6005WV-02P-9TSW1BB-01

TITLE
6.00mm Pin Header Connectors

UNIT	SCALE	SHEET	REV	NUMBER
mm	1:1	1/1	A3	A-023